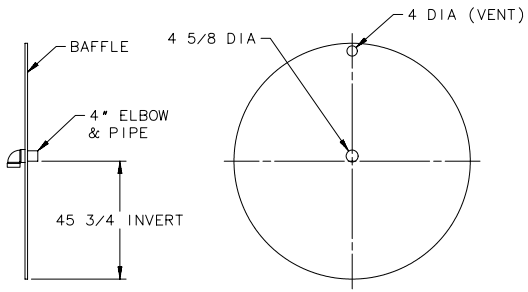

CROSS-OVER & BAFFLE DETAIL

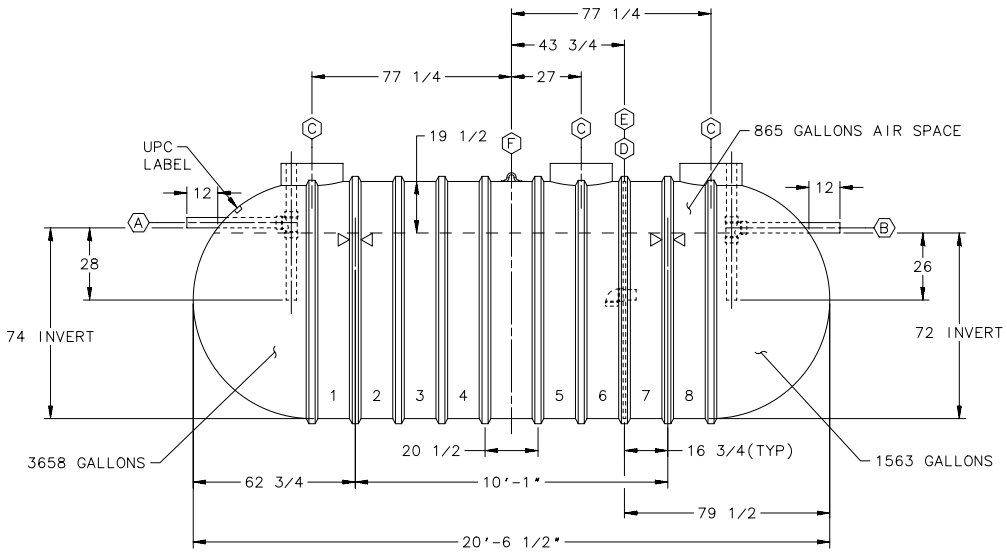

NOTE:

1 - UPC LABEL IS LAMINATED ONTO INLET SIDE OF TANK.

I hereby certify that this plan, specification or report was prepared by me or under my direct supervision and that I am a duly Registered Professional Engineer under the laws of the State of Minnesota

_____ John R. Burwell

Date _____ Reg. No. 24679

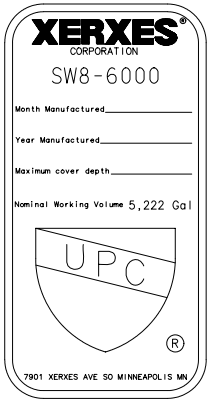

A	4"DIA, 6"DIA OR 8"DIA SCH 40 PVC INLET PIPE WITH INTERNAL SANITARY TEE & PIPES						
B	4"DIA, 6"DIA OR 8"DIA SCH 40 PVC OUTLET PIPE WITH INTERNAL SANITARY TEE & PIPES						
C	RISER PIPE, FOR 24"(NOMINAL) ACCESS OPENING						
D	FULL PLATE BAFFLE WITH 1-4 5/8" DIA HOLE (45 3/4" INVERT) & 4" DIA VENT HOLE						
E	4"DIA SCH 40 PVC CROSS-OVER ELBOW & PIPE						
F	LIFTING LUG						
⋈	HOLD DOWN STRAP LOCATION						

3	MOVE UPC LABEL –					DAG 6-7-06
CHK'D –	DATE –	STD'S –	DATE –	APPR'D JB	DATE 6-7-06	
2	ADD ACCESS OPENING TO RIB 5/6 –					DAG 6-7-06
CHK'D –	DATE –	STD'S –	DATE –	APPR'D JB	DATE 6-7-06	
1	ADD UPC LABEL & CAPACITY DATA –					DAG 4-26-06
CHK'D –	DATE –	STD'S –	DATE –	APPR'D JB	DATE 4-27-06	

XERXES® CORPORATION

DRN DAG	DATE 4-10-06	TITLE 8'DIA SWT CAP. 6,000 GALLONS IAPMO	
CHK'D	DATE		
STD'S	DATE	DR. SIZE D	DR. NUMBER 627-767
APPR'D JB	DATE 4-12-06		REV 03
SCALE: 1/2"=1'-0"		NEXT ASS'Y: –	SHT 1 OF 1